1. GENERAL

1.01. METHODS, PROCEDURES, AND SEQUENCES OF CONSTRUCTION ARE THE RESPONSIBILITY OF THE CONTRACTOR. THE CONTRACTOR SHALL TAKE ALL NECESSARY PRECAUTIONS TO MAINTAIN AND INSURE THE INTEGRITY OF THE STRUCTURE AT ALL STAGES OF CONSTRUCTION.

1.02. COORDINATE STRUCTURAL CONTRACT DOCUMENTS WITH ARCHITECTURAL, MECHANICAL, ELECTRICAL, PLUMBING, CIVIL, AND GEOTECHNICAL REPORT. FOR ADDITIONAL OPENINGS NOT SHOWN ON THE STRUCTURAL DRAWINGS, SEE ARCHITECTURAL, MECHANICAL, AND PLUMBING DRAWINGS.

2. MATERIAL STRENGTHS

		MAX w/c RATIO
2.01. CONCRETE (f'c @ 28 DAYS)		
FOOTINGS	4,000 PSI	0.50
SLAB ON GRADE	3,000 PSI	0.43
TOPPING SLAB	3,000 PSI	0.43

2.02. REINFORCING STEEL (Fy)
- REBAR (ASTM A615) . . . . . 60,000 PSI
- DEFORMED STEEL WELDED WIRE REINFORCING (ASTM A497) . . . . . 65,000 PSI

2.03. STRUCTURAL STEEL (Fy)
- WF SHAPES (ASTM A992) . . . . . 50,000 PSI
- CHANNELS, ANGLES, PLATES & OTHER SHAPES (ASTM A36) . . . 36,000 PSI
- SQUARE & RECTANGULAR HSS (A500 GRADE B) . . . . . 46,000 PSI
- ROUND HSS (A500 GRADE B) . . . . . 42,000 PSI
- ALL BOLTS U.N. A-325-N
- ANCHOR RODS (ASTM F1554) . . . . . GRADE 36
- WELDING ELECTRODES E70XX

2.04. LIGHT GAGE STEEL (Fy)
- ROOF DECK . . . . . 33,000 PSI
- STUDS, JOISTS, TRACKS, TRUSSES mils<54 . . . . . 33,000 PSI
- STUDS, JOISTS, TRACKS, TRUSSES mils>54 . . . . . 50,000 PSI

2.05. MASONRY (MINIMUM COMPRESSIVE STRENGTH PER UNIT STRENGTH METHOD)
- NET AREA COMPRESSIVE STRENGTH OF CONCRETE
- MASONRY UNITS (TYPE M OR S MORTAR) . . . . . 1,900 PSI
- NET AREA COMPRESSIVE STRENGTH OF CONCRETE
- MASONRY (f'm) . . . . . 1,500 PSI
- NET AREA COMPRESSIVE STRENGTH OF CLAY
- MASONRY UNITS (TYPE M OR S MORTAR) . . . . . 8,250 PSI
- NET AREA COMPRESSIVE STRENGTH OF CLAY
- MASONRY (SW) (f'm) . . . . . 3,000 PSI
- MORTAR
  - TYPE "M" . . . . . 2,500 PSI
  - TYPE "S" . . . . . 1,800 PSI
  - TYPE "N" . . . . . 750 PSI
  - GROUT (f'c) . . . . . 3,000 PSI

2.06. SOIL/SUBGRADE PROPRETIES ("SOIL TYPE")
- ALLOWABLE SOIL BEARING PRESSURE . . . . . 2000 PSF (ASSUMED)

3. SUBMITTAL

3.01. SUBMITTALS AND SHOP DRAWINGS SHALL BE SUBMITTED TO DRYE-MCGLAMERY ENGINEERING FOR REVIEW AS REQUIRED PER PROJECT SPECIFICATIONS.

3.02. DRYE-MCGLAMERY ENGINEERING SHALL HAVE 15 DAYS AFTER THE DATE OF RECEIPT OF THE SUBMITTAL FOR REVIEWING AND COMMENTING ON ANY SUBMITTALS.

3.03. THE GENERAL CONTRACTOR AND SUB-CONTRACTORS SHALL REVIEW SUBMITTAL PRIOR TO SUBMITTING THEM TO DRYE-MCGLAMERY ENGINEERING. HIGHLIGHT, CLOUD, OR OTHERWISE INDICATE ITEMS THAT DEVIATE FROM THE CONTRACT DOCUMENTS ON THE SUBMITTAL.

4. FOUNDATION AND SLAB ON GRADE

4.01. SOIL BEARING CAPACITY IS 2000 PSF. BEARING CAPACITY TO BE VERIFIED BY A THIRD PARTY DURING CONSTRUCTION.

4.02. CENTER COLUMN FOOTINGS ON COLUMN CENTERLINES UNLESS NOTED OTHERWISE.

4.03. WALL FOOTINGS ARE CENTERED ON FOUNDATION WALL UNLESS NOTED OTHERWISE.

4.04. COLUMN AND WALL FOOTINGS SHALL BEAR ON ORIGINAL, UNDISTURBED SOIL OR COMPACTED FILL AS DEFINED IN SOIL REPORT, BUT NOT HIGHER THAN THE MINIMUM DEPTH SHOWN ON DRAWINGS.

4.05. CONTRACTOR TO KEEP EXCAVATIONS DRY AND PROTECTED FROM FROST AT ALL TIMES DURING THE FOUNDATION CONSTRUCTION.

4.06. FOUNDATION CONDITIONS NOTED DURING CONSTRUCTION, WHICH DIFFER FROM THOSE DESCRIBED IN THE GEOTECHNICAL REPORT OR ASSUMED VALUES SHALL BE REPORTED TO THE ARCHITECT, GEOTECHNICAL ENGINEER AND DRYE-MCGLAMERY ENGINEERING, BEFORE FURTHER CONSTRUCTION IS ATTEMPTED.

4.07 SLABS ON GRADE SHALL BE CONSTRUCTED IN ACCORDANCE WITH THE PLANS AND NOTES AND SHALL HAVE CONTRACTION JOINTS INSTALLED PER PLAN. CONTRACTION JOINTS SHALL BE TYPICALLY PROVIDED SUCH THAT NO AREA BOUNDED BY CONSTRUCTION AND/OR CRACK CONTROL JOINTS CONTAINS MORE THAN 450 SF OF SLAB AREA. THE SPACING OF THE JOINTS DOES NOT EXCEED 36 TIMES THE SLAB THICKNESS, AND THE RESULTING ASPECT RATIO OF THE DIMENSIONS OF SLAB AREA DOES NOT EXCEED 1.5 TO 1.0. CRACK CONTROL JOINTS SHALL BE MADE USING A "SOFT-CUT" CONCRETE SAW AS SOON AS THE SLAB WILL SUPPORT THE WEIGHT OF THE SAW AND OPERATOR WITHOUT DISTURBING THE FINAL FINISH. THE CRACK CONTROL JOINTS SHALL BE A MAX. WIDTH OF 1/8" WIDE AND A MINIMUM DEPTH OF 1/3 THE SLAB THICKNESS.

5. REINFORCED CONCRETE

5.01. CONCRETE REINFORCING SHALL HAVE THE FOLLOWING MINIMUM PROTECTIVE COVER:
- CONCRETE POURED ON EARTH OR GROUND . . . . . 3 IN
- CONCRETE EXPOSED TO WEATHER
  - #6 THROUGH #18 BARS . . . . . 2 IN
  - #5 BAR, W31 OR D31 WIRE AND SMALLER . . . . . 1 1/2 IN
- CONCRETE NOT EXPOSED TO EARTH OR WEATHER
  - #14 AND #18 BARS . . . . . 1 1/2 IN
  - #11 BAR AND SMALLER . . . . . 1 IN

5.02. SLEEVES, CONDUITS, OR PIPES THROUGH SLABS AND WALLS SHALL BE PLACED SO THAT THEY ARE NOT CLOSER THAN THREE DIAMETERS ON CENTER AND THEY DO NOT DISPLACE REINFORCING.

5.03. DO NOT CUT OR PLACE HOLES IN CONCRETE SLABS, WITHOUT PRIOR APPROVAL OF THE DRYE-MCGLAMERY ENGINEERING.

5.04. BARS SHALL BE SPLICED PER DETAILS WHERE PROVIDED. OTHERWISE BARS SHALL BE CLASS "B" LAP SPLICED IN LONGEST CONVENIENT LENGTHS WITH ADJACENT LAPS STAGGERED 3'-0" MINIMUM. BARS SHALL BE CONTACT SPLICED OR SPACED A MINIMUM DISTANCE APART PER CRSI "REINFORCEMENT ANCHORAGES AND SPLICES", AND A MAXIMUM DISTANCE APART OF THE LESSER OF, 1/5 THE LAP LENGTH OR 6 INCHES.

5.06. CLEAR SPACING BETWEEN REBARS (UNLESS SHOWN TO BE CONTACT LAP SLICED) SHALL BE A MINIMUM OF 1-1/2 BAR DIAMETER, 1-1/2", OR 1-1/3 TIMES THE AGGREGATE SIZE, WHICHEVER IS GREATER.

5.07. ALL HOOKS NOT NOTED SHALL BE ACI STANDARD HOOKS.

5.08. NO TACK WELDING WILL BE PERMITTED ON GRADE 40 OR 60 STEEL.

5.09. CONCRETE TOPPING SHALL BE REINFORCED WITH 6X6-W1.4XW1.4 WWF UNLESS NOTED OTHERWISE. SEE PLAN.

5.10. ANCHOR BOLTS SHALL BE SET AND CONCRETE BEARING SURFACE FOR COLUMNS SHALL BE FINISHED TO THE FOLLOWING TOLERANCE:
- A. ELEVATION OF CONCRETE SURFACE PLUS OR MINUS 3/8"
- B. ELEVATION TOP OF ANCHOR BOLTS PLUS 1" TO MINUS 3/8".
- C. OUT OF POSITION OF ANCHOR BOLTS PLUS OR MINUS 1/8".

5.11. REFER TO ARCHITECTURAL DRAWINGS FOR LOCATION AND DIMENSIONS OF CONCRETE REVEALS, NOTCHES, REGLETS, DRIPS, PADS, CURBS, CHAMFER BLOCKOUTS AT DOORWAYS, AND ALL OTHER PROJECT REQUIREMENTS NOT SHOWN ON THE STRUCTURAL DRAWINGS.

5.12. GROUT FOR BASE PLATES SHALL BE NONSHRINKABLE, NON-METALLIC CONFORMING TO ASTM C827, AND SHALL HAVE A SPECIFIED COMPRESSIVE STRENGTH AT 28 DAYS OF 5000 PSI. PREGROUTING OF BASE PLATES WILL NOT BE PERMITTED. GROUT BASEPLATES AFTER TORQUE IS ACHIEVED ON ALL ANCHOR BOLTS.

5.13. REINFORCE SLAB-ON-GRADE AT ALL PENETRATIONS AND AT RE-ENTRANT CORNERS. PLACE #3x3'-0" AROUND FLOOR DRAINS. PLACE #4x4'-0" (MIN.) AT RE-ENTRANT CORNERS. HOLD REINFORCING 1" CLR FROM TOP OF CONCRETE.

6. MASONRY

6.01. REFER TO "MASONRY LINTELS SCHEDULE" FOR LINTEL DESIGN TYPICAL.

6.02. MASONRY UNITS SHALL BE OF STRUCTURAL LIGHTWEIGHT CONCRETE CONFORMING TO ASTM C90 TYPE N-1 (MAINTAIN MOISTURE CONTROL DURING STORAGE AND ERECTION AT JOB SITE).

6.03. PROVIDE HORIZONTAL LADDER-TYPE WIRE REINFORCING AT 16" C/C MAXIMUM.

6.04. WHERE CONCRETE FILLED BOND BEAMS INTERSECT AT CORNERS AT DIFFERENT ELEVATIONS, RUN EACH BOND BEAM AROUND CORNER FOR TWO BLOCK LENGTHS MINIMUM BEFORE TERMINATING.

6.05. WHERE CONCRETE FILLED BOND BEAMS INTERSECT PARALLEL AT DIFFERENT ELEVATIONS, LAP BOND BEAM FOUR BLOCK LENGTHS MINIMUM BEFORE TERMINATING.

6.06. VERTICAL MASONRY CONTROL JOINTS SHALL BE PROVIDED IN MASONRY WALLS AT 25 FEET MAXIMUM. SEE ARCHITECTURAL DOCUMENTS FOR LOCATION OF CONTROL JOINTS AND REFER TO TYPICAL CMU DETAILS FOR CONTROL JOINT CONSTRUCTION REQUIREMENTS.

6.07. LINTEL UNITS SHALL BE PROVIDED TO SPAN ACROSS OPENINGS IN CONCRETE MASONRY. PROVIDE LINTELS PER TYPICAL CMU DETAILING REQUIREMENTS.

6.08. SPLICES IN HORIZONTAL AND VERTICAL REINFORCING SHALL BE LAPPED 48 BAR DIAMETERS OR A MINIMUM OF 24", WHICHEVER IS GREATER.

6.09. PROVIDE A BOND BEAM WITH 2-#5 CONTINUOUS BENEATH ALL SLAB OR BEAM BEARINGS IN MASONRY WALLS NOT GROUTED SOLID (ALL CELLS FILLED).

6.10. ALL HEAD AND BED JOINTS SHALL BE FULL.

6.11. WHERE HEATING MAINS OR OTHER PIPING PASS THROUGH MASONRY WALLS A STEEL PIPE SLEEVE SHALL BE PLACED IN THE WALL.

6.12. TEST PRISMS TO VERIFY MASONRY WALL ASSEMBLY STRENGTH SHALL BE MADE AND TESTED IN ACCORDANCE WITH THE PROJECT SPECIFICATIONS.

6.13. PRISMS SHALL BE TESTED BY AN APPROVED TESTING LABORATORY.

6.14. SLUMP OF GROUT SHALL BE IN THE RANGE OF 7 TO 11 INCHES AND SHALL BE RECONSOLIDATED BY THE MECHANICAL VIBRATION PER ACI 530.1 TYP.

6.15. VERTICAL GROUTING OF MASONRY WALL SHALL BE PER TYPICAL CMU DETAILS. HORIZONTAL GROUTING OF MASONRY WALLS SHALL BE A CONTINUOUS PROCEDURE BETWEEN CONTROL JOINTS.

TRUSS NOTES:

1. THE TRUSS ENGINEER SHALL DESIGN THE TRUSSES AND GIRDER TRUSSES FOR THE LOADS INDICATED ON THE STRUCTURAL DRAWINGS. SPECIAL LOAD CONSIDERATIONS, SUCH AS OVERFRAMING, ETC. SHALL BE ACCOUNTED FOR IN THE DESIGN.
2. THE TRUSS ENGINEER SHALL ACCEPT FULL RESPONSIBILITY FOR THE DESIGN. THE TRUSS ENGINEER SHALL PREPARE DESIGN CALCULATIONS AND DRAWINGS, WHICH SHALL BE SEALED, SIGNED, AND DATED BY THE RESPONSIBLE PROFESSIONAL ENGINEER REGISTERED IN THE STATE OF NORTH CAROLINA.
3. THE DESIGN SHALL INCLUDE INTERNAL CONNECTIONS AND CONNECTIONS BETWEEN TRUSSES. CONNECTIONS TO OTHER STRUCTURAL MEMBERS AND ARCHITECTURAL SYSTEMS SHALL BE INCLUDED. TYPICAL DETAILS OF CONNECTIONS SHALL BE SHOWN.
4. THE MEMBER SIZE AND PROPERTIES FOR EACH MEMBER USED SHALL BE SHOWN, CLEARLY INDICATING WHERE EACH MEMBER IS BEING USED.
5. PARTICULAR ATTENTION SHALL BE GIVEN TO HEEL HEIGHTS AND TOP CHORD SLOPES TO ENSURE THAT THE FASCIA DETAILS ARE CONSISTENT, ALIGNED, AND IN ACCORDANCE WITH THE ARCHITECTURAL DRAWINGS.
6. THE MAXIMUM SPACING OF THE TRUSSES SHALL BE 24 INCHES ON CENTER, (VERIFY SPACING WITH DETAILS).
7. A SAMPLE SUBMITTAL OF THE TYPICAL TRUSS AND TRUSS GIRDER TYPES SHALL BE SUBMITTED FOR PRELIMINARY REVIEW PRIOR TO COMPLETION OF DESIGN CALCULATIONS AND DRAWINGS.
8. COMPLETE ERECTION PLANS AND DETAILS SHALL BE SUBMITTED TO EACH TRADE FOR REVIEW.
9. THE TRUSS ENGINEER SHALL BE RESPONSIBLE FOR ANY FIELD COORDINATION ISSUES WHICH MAY ARISE REGARDING THE TRUSSES, OPENINGS IN TRUSSES, AND CONNECTIONS OF TRUSSES.
10. TRUSS ENGINEER SHALL VERIFY THAT DETAILS OF CONNECTIONS SHOWN ARE APPROPRIATE FOR HIS TRUSS DESIGN. IF NOT, HE SHALL SUBMIT PROPOSED REVISIONS TO DETAILS.
11. SHIM PLATES SHALL BE INSTALLED AS REQUIRED TO PROVIDE A POSITIVE BEARING SURFACE BETWEEN THE TRUSSES AND THE STRUCTURAL BEAMS AND/OR WALLS. EACH TRUSS SHALL BEAR ON EACH BEAM AND/OR WALL WITH WHICH IT INTERSECTS AS SHOWN ON THE PLAN AND IN THE LOADING DIAGRAMS. UNLESS SPECIFICALLY NOTED, THERE SHALL NOT BE ANY SPACE BETWEEN THE TRUSSES AND THE WALLS

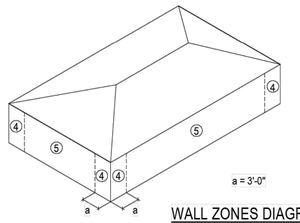

WALL ZONES DIAGRAM

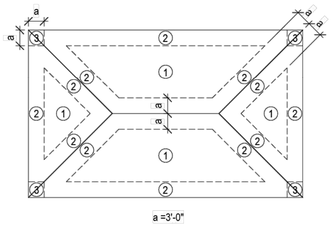

ROOF ZONES DIAGRAM

ROOF PSF					
ZONES	EDGE DIST.	AREA FT^2		OVERHANG	
		10	100	10	100
1	N/A	15.7 -21.7	12.7 -20.2		
2	3'-0"	15.7 -33.7	12.7 -26.2	- -41.2	- -41.2
3	3'-0"	15.7 -47.2	12.7 -38.2	- -63.7	- -45.7

WALLS PSF		
ZONES	AREA FT^2	
	10	100
4	23.2 -24.7	20.5 -22.0
5	23.2 -24.7	20.5 -24.1

COMPONENTS & CLADDING PRESSURE TABLES

LOCATION MAP

APPLICABLE BUILDING CODES:

2018 IBC
2018 NC AMENDMENTS TO ALL CODES.

TYPE IV CONSTRUCTION - NEW 192 SQ. FT.
PRIMARY FIRE DISTRICT
NOT IN FLOOD ZONE

GENERAL NOTES

THE GENERAL CONTRACTOR AND ALL SUBCONTRACTORS SHALL VERIFY ALL DIMENSIONS AND CONDITIONS SHOWN ON THE DRAWINGS AT THE JOBSITE BEFORE PROCEEDING WITH THE WORK.

DO NOT SCALE DRAWINGS, DIMENSIONS GOVERN.

ALL WOOD TO BE PRESSURE TREATED. WAIT 6 MONTHS MIN BEFORE STAINING AND 1 MONTHS MIN BEFORE PAINTING. PAINT DURING OUTDOOR PAINTING SEASON.

REMOVE DEBRIS, RUBBISH AND OTHER MATERIALS TO ON-SITE DUMPSTER. TRANSPORT AND LEGALLY DISPOSE OFF SITE. IF HAZARDOUS MATERIALS ARE ENCOUNTERED, COMPLY WITH ALL APPLICABLE LAWS, REGULATIONS, AND ORDINANCES CONCERNING REMOVAL, HANDLING AND PROTECTION AGAINST EXPOSURE TO ENVIRONMENTAL POLLUTION.

TABLE OF CONTENTS

ISSUE/REVISIOIN	DATE
FOR BIDS	

IRENE J. PRILL
ARCHITECTURAL DESIGNER
828-734-8727

WAYNESVILLE
North Carolina
Progress with Vision
1871

PARK RESTROOM

CRAVEN RD. @ CALVARY ST. WAYNESVILLE, NC

NORTH CAROLINA PROFESSIONAL ENGINEER SEAL 041370 PRESTON R. PRILL

PR ENGINEERING, PLLC

DRAWN BY	Irene Prill
DATE	
SCALE	AS NOTED
PROJECT NO.	
SHEET	0.0
SHEET__OF__	

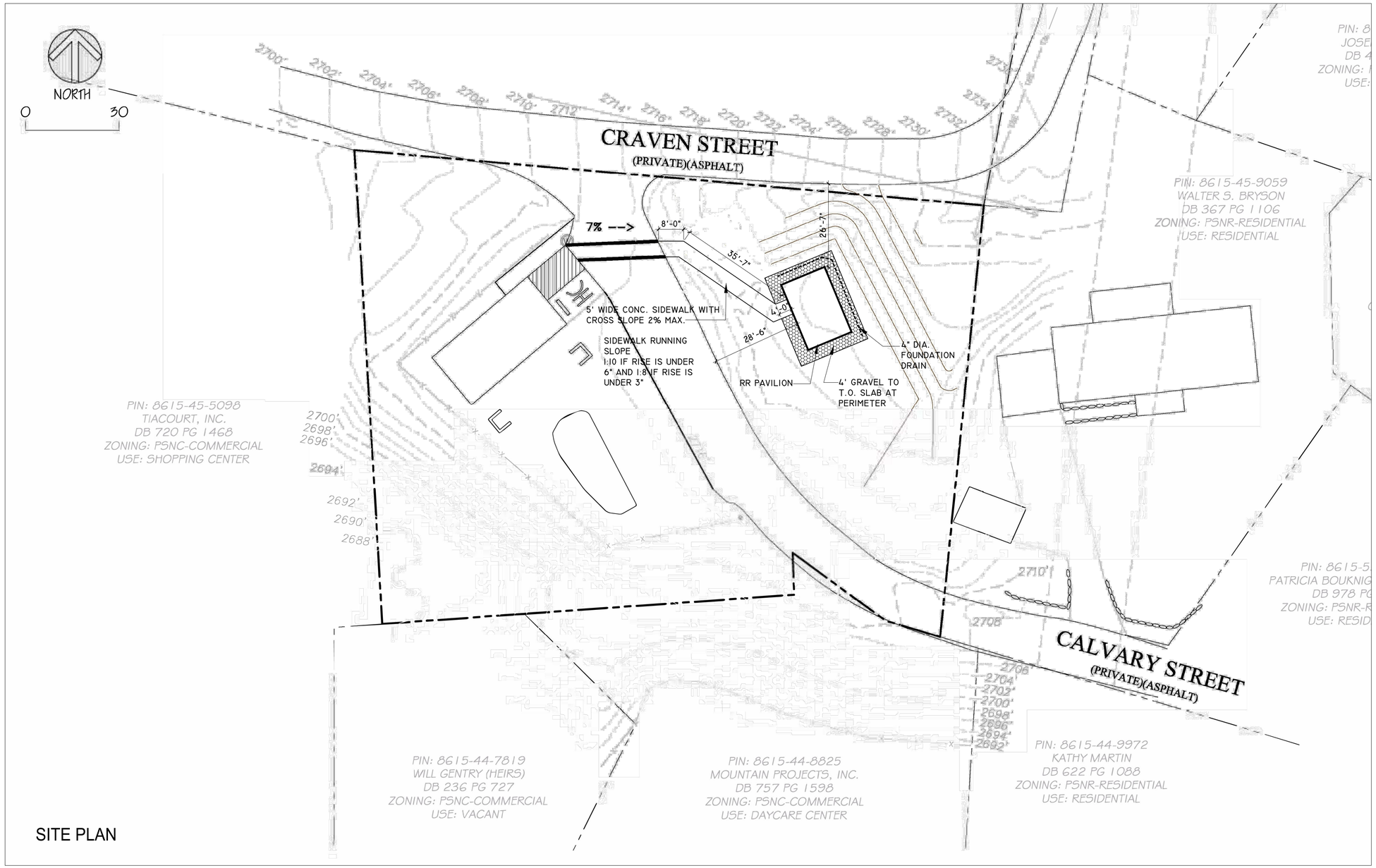

SITE PLAN

ISSUE/REVISIOIN	DATE

IRENE J. PRILL
ARCHITECTURAL DESIGNER
828-734-8727

WAYNESVILLE
North Carolina
Progress with Vision
1871

PARK RESTROOM

CRAVEN RD. @ CALVARY ST. WAYNESVILLE, NC

NORTH CAROLINA PROFESSIONAL ENGINEER SEAL 041370 PRESTON R. OREGON

PR ENGINEERING, PLLC

DRAWN BY	Irene Prill
DATE	
SCALE	AS NOTED
PROJECT NO.	
SHEET	1.0
SHEET__OF__	

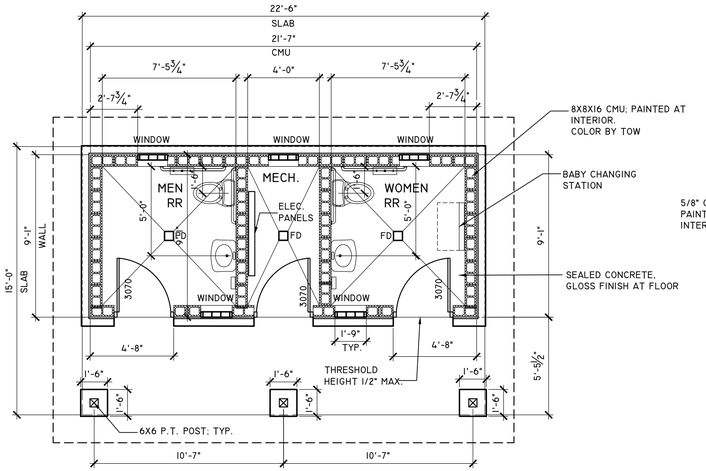

RR PAVILION PLAN
SCALE: 1/4"=1'-0"

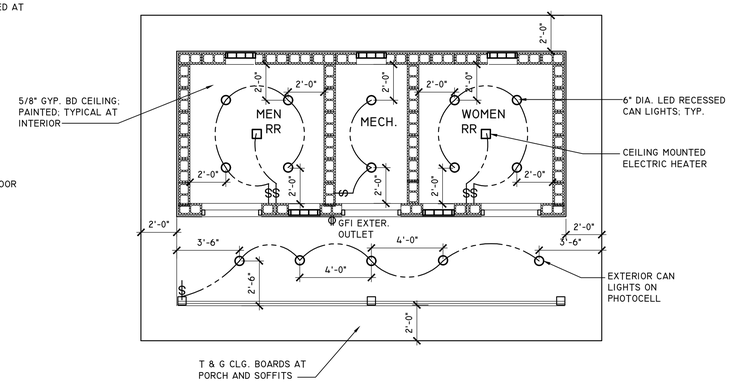

RR PAVILION RCP
SCALE: 1/4"=1'-0"

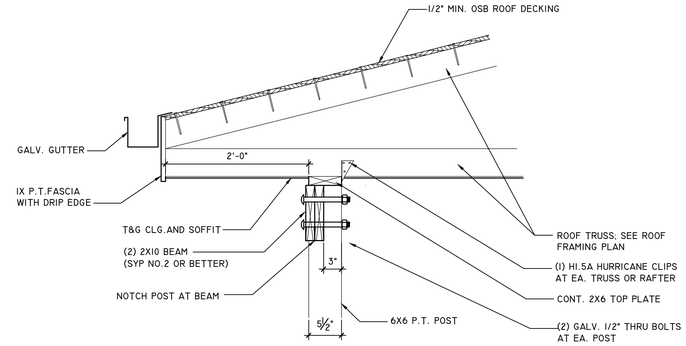

ROOF TRUSS X BEAM CONNECTION
SCALE: 1"=1'-0"

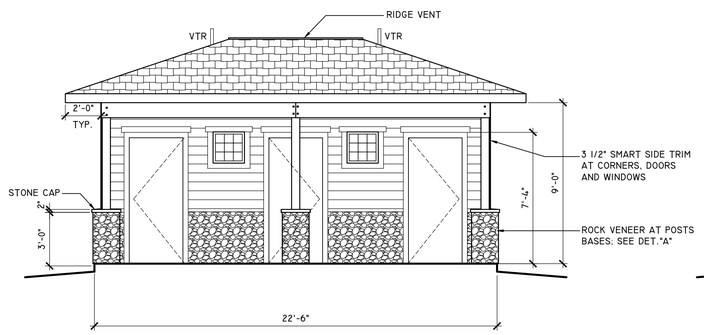

FRONT EXTERIOR ELEVATION
SCALE: 1/4"=1'-0"

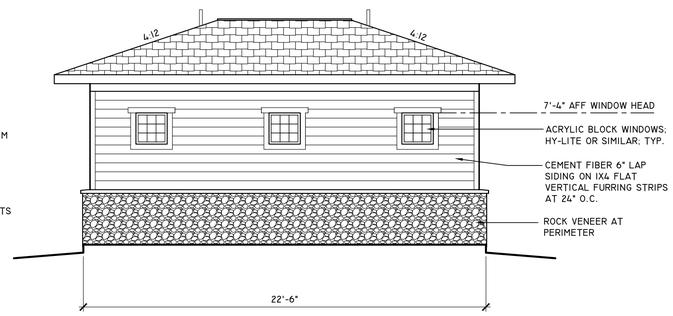

REAR EXTERIOR ELEVATION
SCALE: 1/4"=1'-0"

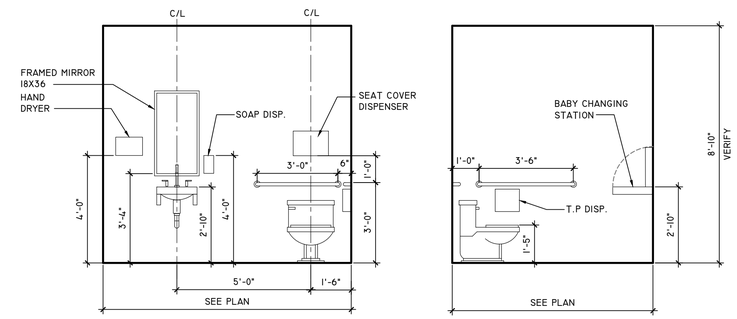

RESTROOM INTERIOR ELEVATIONS
SCALE: 3/8"=1'-0"

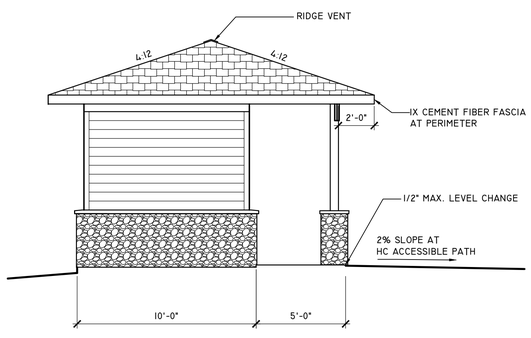

SIDE EXTERIOR ELEVATION - LEFT
SCALE: 1/4"=1'-0"

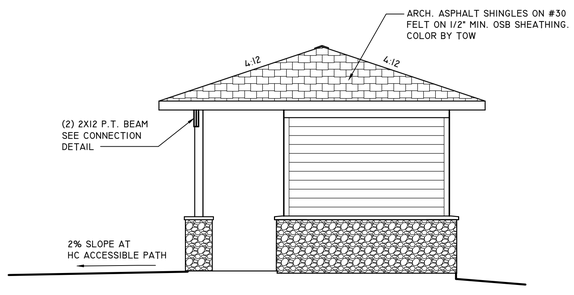

SIDE EXTERIOR ELEVATION - RIGHT
SCALE: 1/4"=1'-0"

ISSUE/REVISIOIN	DATE
FOR BIDS	

IRENE J. PRILL
ARCHITECTURAL DESIGNER
828-734-8727

WAYNESVILLE North Carolina Progress with Vision 1871

PARK RESTROOM
CRAVEN RD. @ CALVARY ST. WAYNESVILLE, NC

NORTH CAROLINA PROFESSIONAL ENGINEER SEAL 041370 PRESTON R. GREGORY

PR ENGINEERING, PLLC

DRAWN BY	Irene Prill
DATE	
SCALE	AS NOTED
PROJECT NO.	
SHEET / SHEET__OF__	2.0

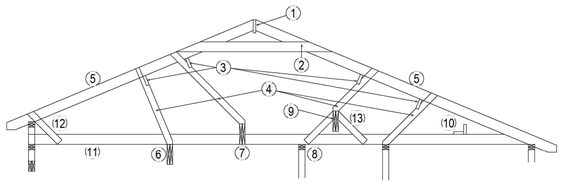

TYPICAL ROOF BRACING DETAILS

NOTES: APPLY UNLESS NOTED OTHERWISE ON STRUCTURAL DRAWINGS.

1. RIDGE MUST BE MINIMUM 1" NOMINAL THICKNESS AND MINIMUM HT EQUAL OR GREATER THAN THE END CUT ON RAFTER.
2. COLLAR TIES PLACED AT THE UPPER 1/3 AND SIZED EQUAL OR GREATER THAN THE RAFTER SPACED AT NO MORE THAN 4' OC.
3. PURLIN EQUIAL OR GREATER THAN THE SIZE OF THE RAFTER AND INSTALLED ON EDGE. LOCATION GIVEN ON DRAWINGS.
4. PURLIN BRACES MINIMUM 2X4 AND SLOPED NO GREATER THAN 45 DEGREES.
5. RAFTER SIZED BY THE DRAWINGS.
6. DROP BEAM.
7. FLUSH BEAM.
8. DBL TOP PLATED WALL.
9. RAISED BEAM. (6, 7, 8, AND 9 ARE ACCEPTABLE MEANS OF ROOF SUPPORT.)
10. STRONG BACK WITH EACH MEMBER EQUAL OR GREATER THAN CEILING JOIST REQUIRED ON SPANS GREATER THAN 10'.
11. CEILING JOIST SIZED BY THE DRAWINGS.
12. 2X4 RAFTER TIES BRACE AT 4' OC WHERE REQUIRED.
13. 2X4 BACK BRACE AT 4' OC CONTINUOUS EACH SIDE.

POST BASE SCHEDULE

POST SIZE	SIMPSON EMBEDDED POST BASE	SIMPSON BOLTED POST BASE
4X4	CB44	ABU44
6X6	CB66	ABU66
8X8	CB88	ABU88

NOTES TO TABLE R602.3(1)

A. ALL NAILS ARE SMOOTH-COMMON, BOX OR DEFORMED SHANKS EXCEPT WHERE OTHERWISE STATED.
B. STAPLES ARE 16 GAGE WIRE AND HAVE A MINIMUM 7/16-INCH ON DIAMETER CROWN WIDTH.
C. NAILS SHALL BE SPACED AT NOT MORE THAN 6 INCHES ON CENTER AT ALL SUPPORTS WHERE SPANS ARE 48 INCHES OR GREATER.
D. FOUR-FOOT-BY-8-FOOT OR 4-FOOT-BY-9-FOOT PANELS SHALL BE APPLIED VERTICALLY.
E. SPACING OF FASTNERS NOT INCLUDED IN THIS TABLE SHALL BE BASED ON TABLE R602.3(1).
F. (FOR REGIONS HAVING BASIC WIND SPEED OF 110 MPH OR GREATER, 8D DEFORMED NAILS SHALL BE USED FOR ATTACHING PLYWOOD AND WOOD STRUCTURAL PANEL ROOF SHEATHING TO FRAMING WITHIN MINIMUM 48-INCH DISTANCE FROM GABLE END WALLS, IF MEAN ROOF HEIGHT IS MORE THAN 25 FEET, UP TO 35 FEET MAXIMUM.
G. FOR REGIONS HAVING A BASIC WIND SPEED OF 100 MPH OR LESS, NAILS FOR ATTACHING WOOD STRUCTURAL PANEL ROOF SHEATHING TO GABLE END WALL FRAMING SHALL BE SPACED 6 INCHES ON CENTER. WHEN BASIC WIND SPEED IS GREATER THAN 80 MPH, NAILS FOR ATTACHING PANEL ROOF SHEATHING TO INTERMEDIATE SUPPORTS SHALL BE SPACED 6 INCHES ON CENTER FOR MINIMUM 48-INCH DISTANCE FROM RIDGES, EAVES AND GABLE END WALLS; 4 INCH ON CENTER TO GABLE END WALL FRAMING.
H. GYPSUM SHEATHING SHALL CONFROM TO ASTM C-79 AND SHALL BE INSTALLED IN ACCORDANCE WITH GA 253. FIBERBOARD SHEATHING SHALL CONFROM TO EITHER AHA 194.1 OR ASTM C-208.
I. SPACING OF FASTENERS ON FLOOR SHEATHING PANEL EDGES APPLIES TO PANEL EDGES SUPPORTED BY FRAMING MEMBERS AND AT ALL FLOOR PERIMETERS ONLY. SPACING OF FASTENERS ON ROOF SHEATHING PANEL EDGES APPLIES TO PANEL EDGES SUPPORTED BY FRAMING MEMBERS AND AT ALL ROOF PLANE PERIMETERS. BLOCKING OF ROOF OR FLOOR SHEATHING PANEL EDGESPERPENDICULAR TO THE FRAMING MEMBERS SHALL NOT BE REQUIRED EXCEPT AT INTERSECTION OF ADJACENT ROOF PLANES. FLOOR AND ROOF PERIMETER SHALL BE SUPPORTED BY FRAMING MEMBERS OR SOLID BLOCKING.

FASTENER SCHEDULE

IRC - TABLE R602.3(1)

DESCRIPTION OR BUILDING ELEMENTS	NUMBER AND TYPE OF FASTNER (A,B,C,D)	SPACING OF FASTENERS
JOIST TO SILL OR GIRDER, TOE NAIL	3-8D	
1"X6" SUBFLOOR OR LESS TO EACH JOIST, FACE NAIL	2-8D 2-1 3/4" 16 GAGE STAPLE	
2" SUBFLOOR TO JOIST OR GIRDER, BLIND AND FACE NAIL	2-16D	
SOLE PLATE TO JOIST OR BLOCKING, FACE NAIL	16D	16" O.C.
TOP OR SOLE PLATE TO STUD, END NAIL	2-16D	
STUD TO SOLE PLATE, TOE NAIL	3-8D 2-16D	
DOUBLE STUD, FACE NAIL	10D	24" O.C.
DOUBLE TOP PLATE, FACE NAIL	10D	24" O.C.
SOLE PLATE TO JOIST OR BLOCKING AT BRACED WALL PANEL	3-16D	16" O.C.
DOUBLE TOP PLATES, MINIMUM 48-INCH OFFSET OF END JOINTS, ACE NAIL IN LAPPED AREA	8-16D	
BLOCKING BETWEEN JOISTS OR RAFTERS TO TOP PLATE, TOE NAIL	3-8D	
RIM JOIST TO TOP PLATE, TOE NAIL	8D	6" O.C.
TOP PLATES, LAPS AT CORNERS AND INTERSECTIONS, FACE NAIL	2-10D	
BUILT-UP HEADER, TWO PIECES WITH 1/2-INCH SPACER	16D	16" O.C. ALONG EACH EDGE
CONTINUOUS HEADER, TWO PIECES	16D	16" O.C. ALONG EACH EDGE
CEILING JOIST TO PLATE, TOE NAIL	3-8D	
CONTINUED HEADER TO STUD, TOE NAIL	4-8D	
CEILING JOIST, LAPS OVER PARTITIONS, FACE NAIL	3-10D	
CEILING JOIST TO PARALLEL RAFTERS, FACE NAIL	3-10D	
RAFTERS TO PLATE, TOE NAIL	2-16D	
1" BRACE TO EACH STUD AND PLATE FACE NAIL	2-8D 2-1 3/4" 16 GAGE STAPLES	
1"X6" SHEATHING TO EACH BEARING WALL, FACE NAIL	2-8D 2-1 3/4" 16 GAGE STAPLES	
1"X8" SHEATHING TO EACH BEARING WALL, FACE NAIL	2-8D 3-1 3/4" 16 GAGE STAPLES	
WIDER THAN 1'X8" SHEATHING TO BEARING WALL, FACE NAIL	3-8D 4-1 3/4" 16 GAGE STAPLES	
BUILD-UP CORNER STUDS	10D	24" O.C.
BUILD-UP GIRDERS AND BEAMS 2-INCH LUMBER LAYERS	10D	NAIL EACH LAYER AS FOLLOWS: 32' O.C. AT TOP AND BOTTOM AND STAGGERED. TWO NAILS AT ENDS AND AT EACH SPLICE.
ROOF RAFTERS TO RIDGE, VALLEY OR FACE NAIL	4-16D 3-16D	
RAFTER TIES TO RAFTERS, FACE NAIL	3-8D	

WOOD STRUCTURAL PANELS, SUBFLOOR, ROOF AND WALL SHEATHING TO FRAMING, AND PARTICLEBOARD WALL SHEATHING TO FRAMING			
5/16" - 1/2"	6D COMMON NAIL (SUBFLOOR, WALL) 8D COMMON (ROOF)(F)	6	12 (G)
19/32" TO 1"	8D COMMON NAIL	6	12 (G)
1 1/8" TO 1 1/4"	10D COMMON NAIL OR 8D DEFORMED NAIL	6	12

DESCIPTION OF BUILDING MATERIAL	DESCIPTION OF BUILDING MATERIAL	EDGES (INCHES) (I)	SPACING OF FASTENERS INTERMEDIATE SUPPORTS (INCHES) (C,E)
OTHER WALL SHEATHING			
1/2" GYPSUM SHEATHING	1 1/2" GALVANIZED ROOFING NAIL 6D COMMON NAIL 1 1/2" 16 GA GALVANIZED STAPLE 1 1/4" SCREW, TYPE W OR S	4	8
5/8" GYPSUM SHEATHING	1 3/4" GALVANIZED ROOFING NAIL 8D COMMON NAIL 1 5/8" 16 GA GALVANIZED STAPLE 1 5/8" SCREW, TYPE W OR S	4	8
WOOD STRUCTURAL PANELS, COMBINATION SUBFLOOR UNDERLAYMENT TO FRAMING			
3/4" AND LESS	6D DEFORMED NAIL OR 8D COMMON NAIL	6	12
7/8" - 1"	8D COMMON NAIL OR 8D DEFORMED NAIL	6	12
1 1/8" - 1 1/4"	10D COMMON NAIL OR 8D DEFORMED NAIL	6	12

1 FASTENER SCHEDULE
1/4" = 1'-0"

STRUCTURAL NOTES

1. GENERAL

1.01 THE STRUCTURE IS DESIGNED IN ACCORDANCE AND MEETS THE DESIGN CRITERIA OF THE FOLLOWING CODES:
2018 NORTH CAROLINA RESIDENTAIL BUILDING CODE
ASCE 7-05, MINIMUM DESIGN LOADS FOR BUILDING AND OTHER STRUCTURES
NDS-05, NATIONAL DESIGN SPECIFICATIONS FOR WOOD CONSTRUCTION

1.02. METHODS, PROCEDURES, AND SEQUENCES OF CONSTRUCTION ARE THE RESPONSIBILITY OF THE CONTRACTOR. THE CONTRACTOR SHALL TAKE ALL NECESSARY PRECAUTIONS TO MAINTAIN AND INSURE THE INTEGRITY OF THE STRUCTURE AT ALL STAGES OF CONSTRUCTION.

1.03. COORDINATE STRUCTURAL CONTRACT DOCUMENTS WITH ARCHITECTURAL, MECHANICAL, ELECTRICAL, PLUMBING, CIVIL, AND GEOTECHNICAL REPORT. FOR ADDITIONAL OPENINGS NOT SHOWN ON THE STRUCTURAL DRAWINGS, SEE ARCHITECTURAL, MECHANICAL, AND PLUMBING DRAWINGS.

1.04 THE GENERAL CONTRACTOR IS RESPONSIBLE FOR COORDINATION OF ALL RESULTING REVISIONS TO THE STRUCTURAL SYSTEM OR OTHER TRADES AS A RESULT OF ACCEPTANCE OF CONTRACTOR PROPOSED ALTERNATIVES OR SUBSTITUTIONS.

DESIGN LOADS

2.01 DESIGN GRAVITY LOADS ARE AS FOLLOWS:
SUPERIMPOSED AREA DEAD LOAD (included but not limited to the following):
SINGLE PLY ROOF....3 PSF

AREA LIVE LOADS
ROOF....20 PSF
FLOOR....40 PSF
DECKS....40 PSF
GARAGE....100 PSF

2.02 ROOF SNOW LOAD
GROUND SNOW LOAD....30 PSF
SNOW EXPOSURE FACTOR Ce....1.0
SNOW LOAD IMPORTANCE FACTOR Is....1.0
THERMAL FACTOR Ct....1.0

2.03 WIND LOAD
BASIC WIND SPEED (BUILDING FRAME - 3 SEC GUST.)....120 MPH
WIND IMPORTANCE FACTOR (I)....1.0
BUILDING CATEGORY....ENCLOSED
WIND EXPOSURE CATEGORY....C
INTERNAL PRESSURE COEFFICIENT....+0.18/ -0.18

3. MATERIAL STRENGTHS

3.01. ALL CONCRETE (f'c @ 28 DAYS) U.N.O.
FOOTINGS. . . . . .3,000 PSI
SLAB ON GRADE . . . . . .3,000 PSI
TOPPING SLAB . . . . . .3,000 PSI

3.02. REINFORCING STEEL (Fy)
REBAR (ASTM A615). . . . . 60,000 PSI
DEFORMED STEEL WELDED WIRE REINFORCING (ASTM A497). . . . . 65,000 PSI

3.03. STRUCTURAL STEEL (Fy)
WF SHAPES (ASTM A992) . . . . . 50,000 PSI
CHANNELS, ANGLES, PLATES & OTHER SHAPES (ASTM A36). . . 36,000 PSI
SQUARE & RECTANGULAR HSS (A500 GRADE B) . . . . . 46,000 PSI
ROUND HSS (A500 GRADE B). . . . . 42,000 PSI
ALL BOLTS U.N. A-325-N
ANCHOR RODS (ASTM F1554). . . . . GRADE 36
WELDING ELECTRODES. E70XX

3.04. LIGHT GAGE STEEL (Fy)
ROOF DECK . . . . . 33,000 PSI
STUDS, JOISTS, TRACKS, TRUSSES mils<54. . . . . 33,000 PSI
STUDS, JOISTS, TRACKS, TRUSSES mils>54. . . . . 50,000 PSI

3.05. MASONRY (MINIMUM COMPRESSIVE STRENGTH PER UNIT STRENGTH METHOD)
NET AREA COMPRESSIVE STRENGTH OF CONCRETE
MASONRY UNITS (TYPE M OR S MORTAR). . . . . .1,900 PSI
NET AREA COMPRESSIVE STRENGTH OF CONCRETE
MASONRY (f'm) . . . . . .1,500 PSI
NET AREA COMPRESSIVE STRENGTH OF CLAY
MASONRY UNITS (TYPE M OR S MORTAR). . . . . .8,250 PSI
NET AREA COMPRESSIVE STRENGTH OF CLAY
MASONRY (SW) (f'm). . . . . .3,000 PSI
MORTAR
TYPE "M" . . . . . 2,500 PSI
TYPE "S" . . . . . 1,800 PSI
TYPE "N" . . . . . 750 PSI
GROUT (f'c) . . . . . 3,000 PSI

3.06. SOIL/SUBGRADE PROPRETIES ("SOIL TYPE")
ALLOWABLE SOIL BEARING PRESSURE . . . . . 3,500 PSF (ASSUMED)

3.07 WOOD FRAMING (2001 NDS)
COLUMNS
SP - NO. 1, 5"x5" AND LARGER

BEAMS / STUDS
SP - NO. 2 OR SPF - NO. 2 U.N.O.

LVL BEAMS
Fb....2,600 PSI
Fv....285 PSI
Fc (PERP)....750 PSI
Fc....2,510 PSI
E....2,000,000 PSI

WOOD - ROOF AND CEILING JOISTS

7.01 GENERAL. THE FRAMING DETAILS GIVEN HERE APPLY TO ROOFS HAVEING A MIN. SLOPE OF 3:12 OR GREATER. WHEN THE ROOF IS LESS THAN 3:12, MEMBERS SUPPORTING RAFTERS AND CEILING JOISTS SUCH AS RIDGE BOARD, HIPS AND VALLEY SHALL BE DESIGNED AS BEAMS.

7.02 FRAMING. RAFTERS SHALL BE FRAMED DIRECTLY OPPOSITE EACH OTHER ON THE RIDGE AND WHEREVER POSSIBLE ON THE HIPS AND VALLEYS. RIDGES SHALL BE AT LEAST 1" NOMINAL THICKNESS AND NOT LESS IN DEPTH THAN THE CUT END OF THE RAFTER. AT ALL VALLEYS AND HIPS THERE SHALL BE A SINGLE VALLEY OR HIP RAFTER NOT LESS THAN 2" NOMINAL THICKNESS AND NOT LESS IN DEPTH THAN THE CUT END OF THE RAFTER. WHENEVER THE RAFTER DOES NOT ALIGN WITH EACH OTHER ON THE RIDGE, HIP OR VALLEY, THE RIDGE, HIP OR VALLEY MUST BE DESIGNED AS A BEAM.

7.03 RAFTER TIES. RAFTERS SHALL BE NAILED TO ADJACENT CEILING JOIST TO FORM A CONT. TIE BETWEEN EXTERIOR WALLS WHEN SUCH JOISTS ARE PARALLEL TO THE RAFTERS. WHERE NOT PARALLEL, RAFTERS SHALL BE TIED TO 2 BY 4 (NOMINAL) MIN. SIZE CROSS TIES. RAFTER TIES SHALL BE SPACED NOT MORE THAN 4' O/C. THE SEAT CUT OF THE RAFTER BIRD'S MOUTH SHALL BE NO LONGER THAN IT'S BEARING MEMBER.

7.04 BLOCKING. ROOF RAFTERS AND CEILING JOISTS SHALL BE SUPPORTED LATERALLY TO PREVENT ROTATION AND LATERAL DISPLACEMENT.

7.05 ROOF SHEATHING. PLYWOOD MUST BE OF MIN. 1/2" THICKNESS AND MEET ALL OTHER REQUIREMENTS OF THE CODE. END JOINTS IN PLYWOOD SHALL OCCUR OVER SUPPORTS AND END JOINTS SHALL BE STAGGERED A MIN. OF ONE MEMBER ON ADJACENT ROWS.

WOOD CONSTRUCTION CONNECTORS

8.01 ALL WOOD CONSTRUCTION CONNECTORS SHALL BE SIMPSON STRONG-TIE CONNECTORS OR APPROVED EQUIVALENT.

8.02 ALL SPECIFIED FASTENERS SHALL BE INSTALLED ACCORDING TO THE DETAILS AND THE MANUFACTURER'S INSTRUCTIONS. ALL HOLES IN CONNECTORS SHALL BE PROPERLY NAILED TO THE WOOD STRUCTURE. CONTACT PR ENGINEERING FOR FASTENERS NOT SHOWN. INCORRECT FASTENER QUANTITY, SIZE TYPE, MATERIAL, OR FINISH MAY CAUSE THE CONNECTION TO FAIL. 16D FASTENDERS ARE COMMON NAILS (8 GA. X 3 1/2") AND CANNOT BE REPLACED WITH 16D SINKERS (9 GA. 3 1/4") U.N.O.

8.03 DIAMETER (PER THE NDS, SECTION 8.1.2.1).

8.04 INSTALL ALL SPECIFIED FASTENERS BEFORE LOADING THE CONNECTION.

8.05 JOISTS SHALL BEAR COMPLETELY ON THE CONNECTION SEAT, AND THE GAP BETWEEN THE JOIST END AND THE HEADER SHALL NOT EXCEED 1/8" PER ASTM TEST STANDARDS.

8.06 UNLESS OTEHRWISE NOTED, BOLTS AND NAILS SHALL NOT BE COMBINED.

8.07 A FASTENER THAT SPLITS THE WOOD WILL NOT SUPPORT THE DESIGN LOAD. IF THE WOOD HAS A TENDENCY TO SPLIT, PRE-BORE HOLES TO 3/4 OF THE NAIL DIAMETER (NDS 2.1.3.1).

HANDRAILS

9.01 BALANCY RAILINGS, GUARDRAILS AND HANDRAILS SHALL BE DESIGNED AND CONSTRUCTED IN ACCORDANCE WITH SECTION 16 OF THE NC BUILDING CODE AS FOLLOWS:

GUARDRAILS AND BALCONY RAILINGS SHALL BE DESIGNED TO SUPPORT A LATERAL LOAD OF 50 PLF APPLIED HORIZONTALLY AT RIGHT ANGLES TO THE TOP OF RAIL.

INTERMEDITAL RAILS AND THEIR CONNECTIONS SHALL BE DESIGNED TO SUPPORT A LOAD 25 PLF APPLIED HORIZONTALLY AT RIGHT ANGLES OVER THE ENTIRE TRIBUTARY AREA.

STRUCTURAL STEEL

10.01 SPLICING OF STRUCTURAL STEEL MEMBERS WHERE NOT DETAILED ON THE CONTRACT DOCUMENTS IS PROHIBITED WITHOUT THE PRIOR APPROVAL OF THE STRUCTURAL ENGINEER AS TO LOCATION, TYPE OF SPLICE AND CONNECTION TO BE MADE.

10.02 SET STEEL ACCURATELY IN LOCATIONS AND ELEVATIONS INDICATED ON THE CONTRACT DOCUMENTS.

WOOD FRAMED WALL HEADER SCHEDULE			
OPENING	HEADER SIZE	NO. JACK STUDS	MIN. NO. FULL HT. STUDS
6'-4" OR LESS	(3) - 2x8	1 EA. SIDE	1 EA. SIDE

NOTE:
1. USE SIZES INDICATED IN SCHEDULE UNLESS NOTED OTHERWISE ON PLAN.
2. PROVIDE BLOCKING BETWEEN EA. MEMBER TO ACHIEVE PROPER WIDTH.
3. USE SIMPSON HH6 AT HEADER CONNECTION TO FULL HT. STUDS IF THERE ARE NO CRIPPLE STUD SUPPORTS.
4. ALL JACK STUDS TO BE TIED TOGET WITH SIMPSON CS20 STRAPS A 2'-0" C/C VERT. MAX EA. SIDE- TYP.

FRAMING NOTES

1. ALL MULTI-PLY BEAMS (i.e. (2) 1-3/4 x 11 7/8 LVL) SUPPORTING FLUSH JOISTS / BEAMS TO HAVE PLY'S GLUED AND NAILED TOGETHER W/ (3) 16D COMMON NAILS AT 12" C/C FOR 2-PLY BEAMS AND (3) 16D COMMON NAILS AT 12" C/C EA SIDE FOR 3 OR MORE PLY BEAMS. UNLESS NOTED OTHERWISE (UNO).

MEMBER SIZE	TOP PLATE BEARING COND. REQ. # STUDS	NON BEARING COND. REQ. CONNECTOR
2X6	N/A	LUS26
2X8	N/A	LUS28
2X10	N/A	LUS210
2X12	N/A	LUS212
(2) 2X8	(2) 2X4	LUS26-2
(2) 2X10	(2) 2X4	LUS210-2
(2) 2X12	(3) 2X4	LUS210-2
(3) 2X10	(3) 2X4	LUS28-3
(3) 2X12	(3) 2X4	HU212-3
1-3/4" X 7-1/4" LVL	(2) 2X4	N/A
(2) 1-3/4" X 7-1/4" LVL	(3) 2X4	HHUS48
(2) 1-3/4" X 9-1/4" LVL	(3) 2X4	HHUS410
(2) 1-3/4" X 11-1/4" LVL	(3) 2X6	HGUS410
(2) 1-3/4" X 14" LVL	(3) 2X6	HHUS410
(3) 1-3/4" X 14" LVL	(3) 2X6	HHUS5.5/10
(3) 1-3/4" X 16" LVL	(4) 2X4	HHUS5.5/10
(3) 1-3/4" X 20" LVL	(4) 2X4	HGUS5.5/14

PR ENGINEERING, PLLC

ISSUE/REVISIOIN	DATE

IRENE J. PRILL
ARCHITECTURAL DESIGNER
828-734-8727

WAYNESVILLE North Carolina Progress with Vision 1871

PARK RESTROOM

CRAVEN RD. @ CALVARY ST. WAYNESVILLE, NC

NORTH CAROLINA PROFESSIONAL SEAL 041370 ENGINEER PRESTON R. GREGORY

DRAWN BY	Irene Prill
DATE	
SCALE	AS NOTED
PROJECT NO.	
SHEET	S-0
SHEET__OF__	

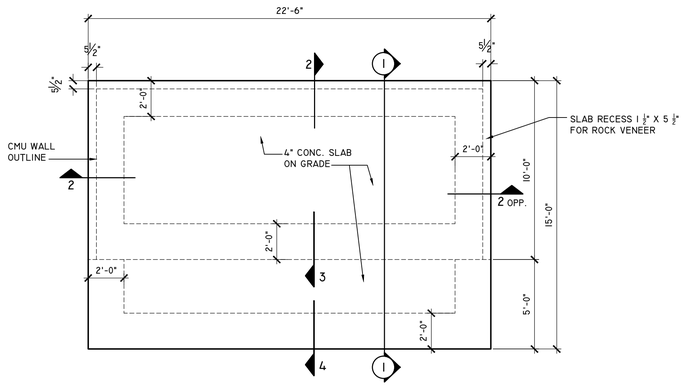

FOUNDATION PLAN
SCALE: 1/4"=1'-0"

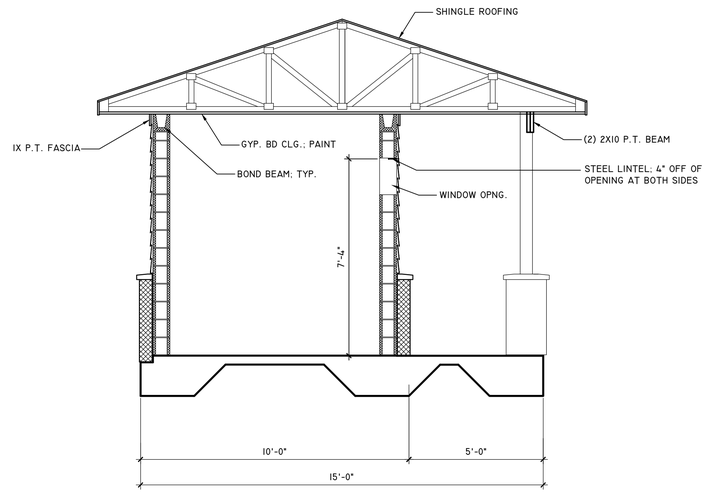

BUILDING SECTION 1-1
SCALE: 3/8"=1'-0"

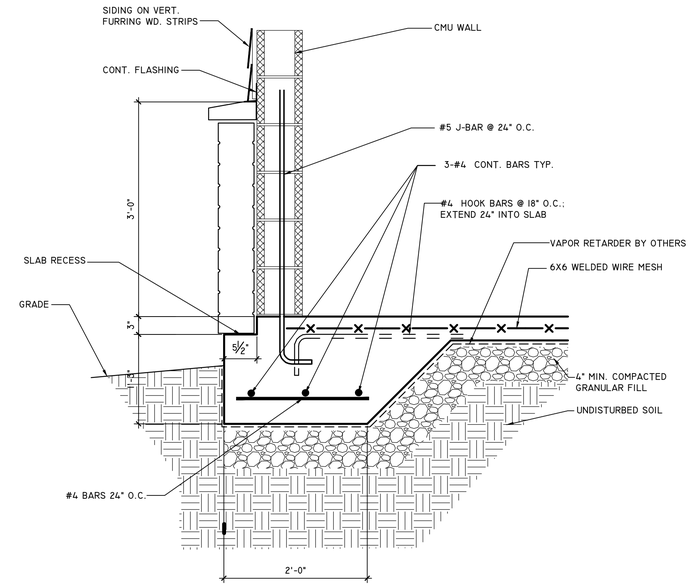

SECTION 2
SCALE 1"=1'-0"

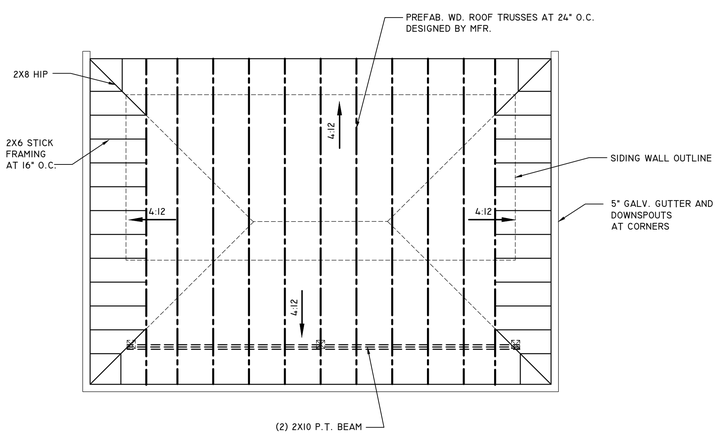

RR ROOF FRAMING
SCALE: 1/4"=1'-0"

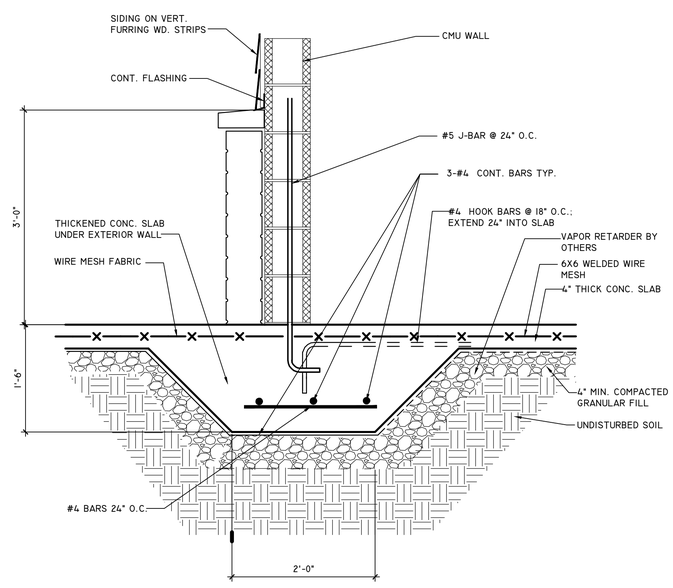

SECTION 3
SCALE 1"=1'-0"

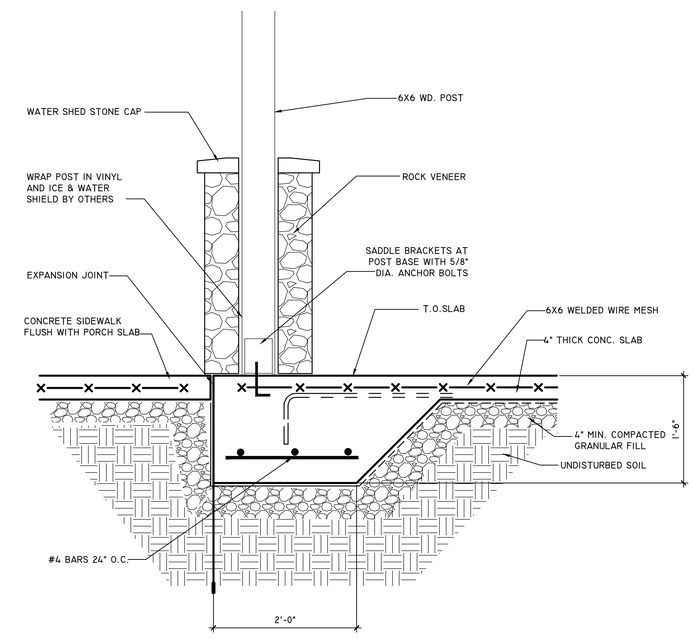

SECTION 4
SCALE 1"=1'-0"

ISSUE/REVISIOIN	DATE

IRENE J. PRILL
ARCHITECTURAL DESIGNER
828-734-8727

WAYNESVILLE North Carolina Progress with Vision 1871

PARK RESTROOM
CRAVEN RD. @ CALVARY ST. WAYNESVILLE, NC

NORTH CAROLINA PROFESSIONAL ENGINEER SEAL 041370 PRINCETON R. ORECK

PR ENGINEERING, PLLC

DRAWN BY	Irene Prill
DATE	
SCALE	AS NOTED
PROJECT NO.	
SHEET	S-1
SHEET__OF__	